HANSA**BLUEBOX**

Installation and maintenance guide

4-6

7-10

11

12-16

17

http://movie.hansa.com/blbx_install

8000 0000

100 - 1000 kPa
max. +90°C

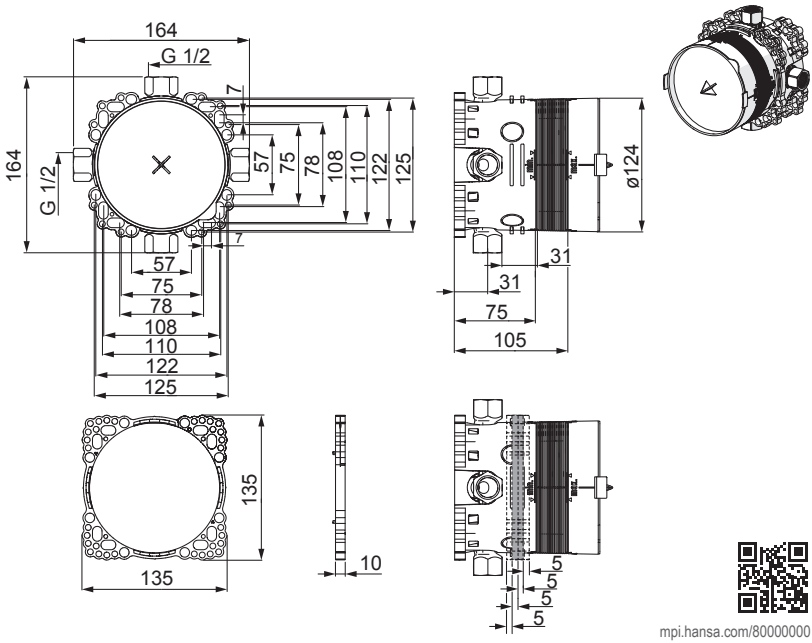

mpi.hansa.com/80000000

8001 0000

100 - 1000 kPa
max. +90°C

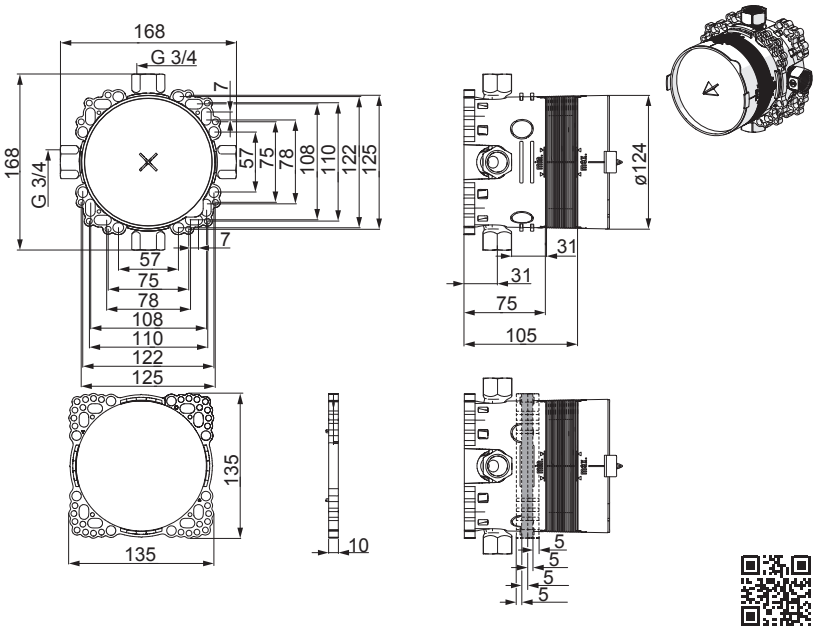

mpi.hansa.com/80010000

8001 0000 0074

100 - 1000 kPa
max. +90°C

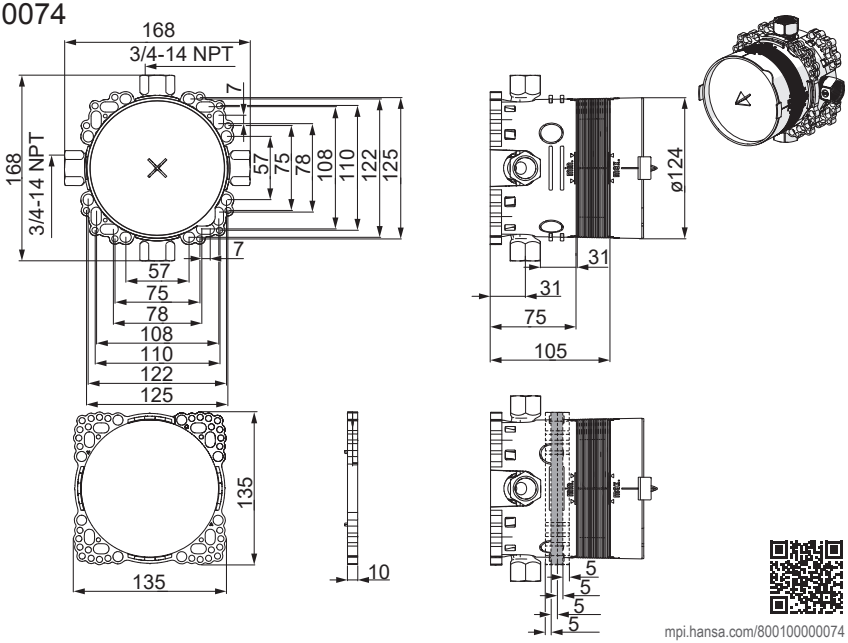

mpi.hansa.com/800100000074

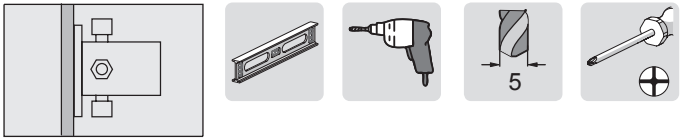
5

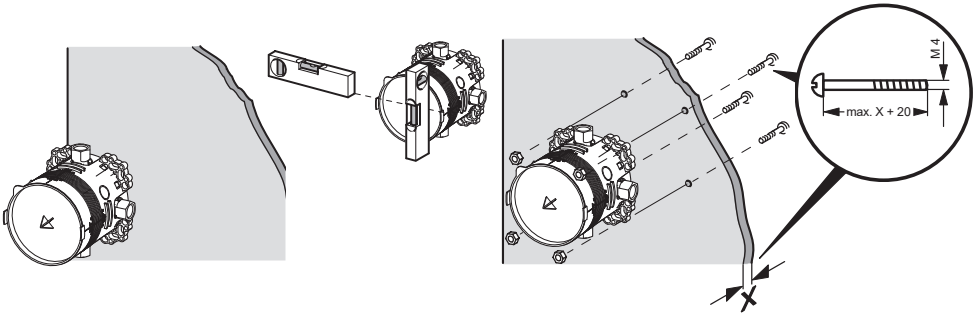
M 4
max. X + 20
X

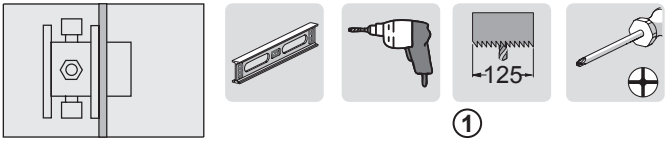
125
1

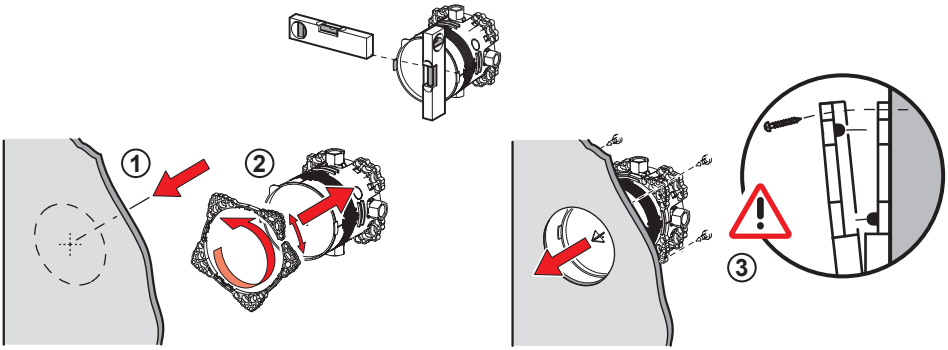
1
2
3

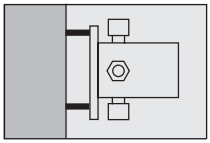

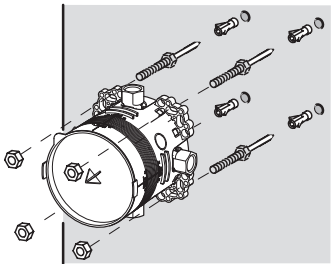
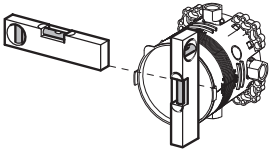

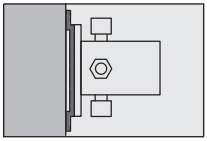

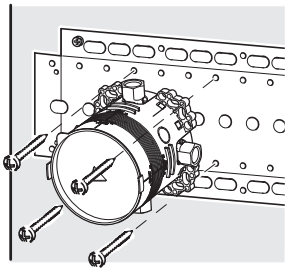
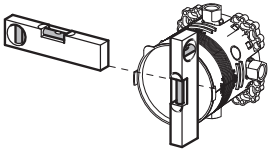

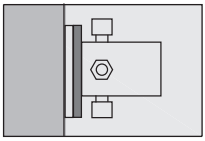

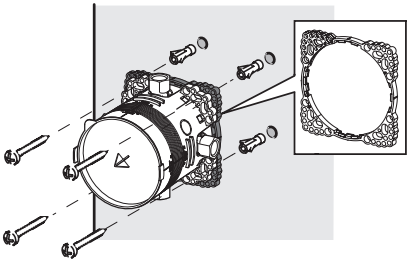
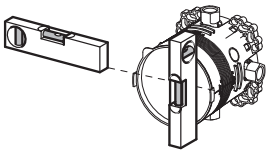

8000
Off
On

27

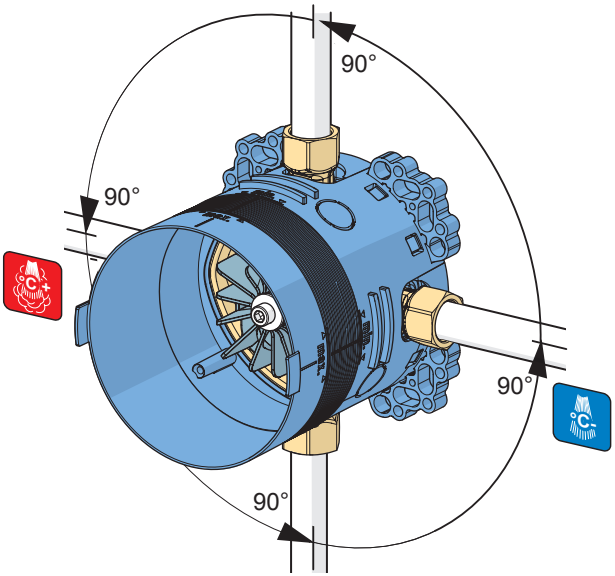
90°
90°
90°
90°

8001
Off
On

34

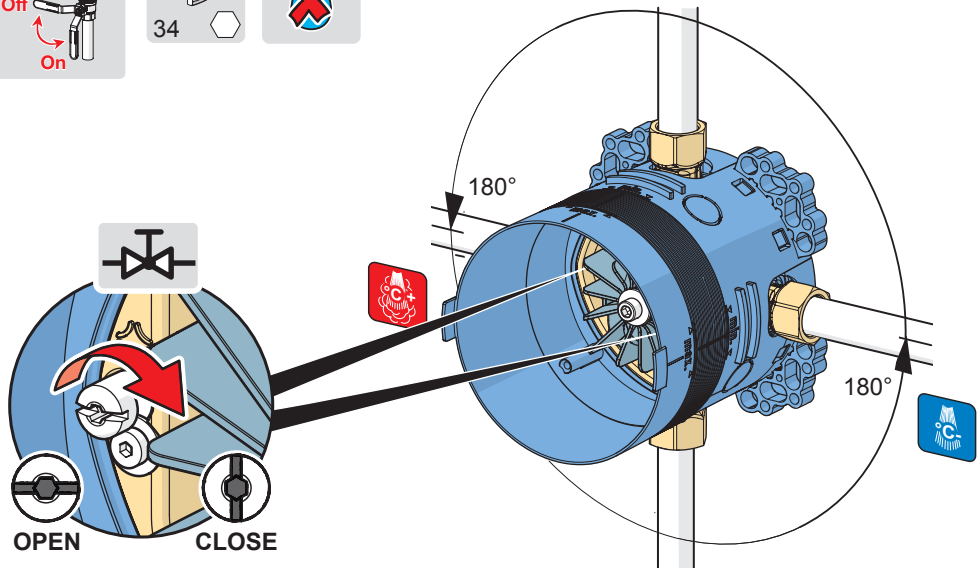
180°
180°
OPEN
CLOSE

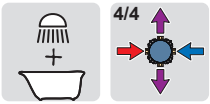
4/4

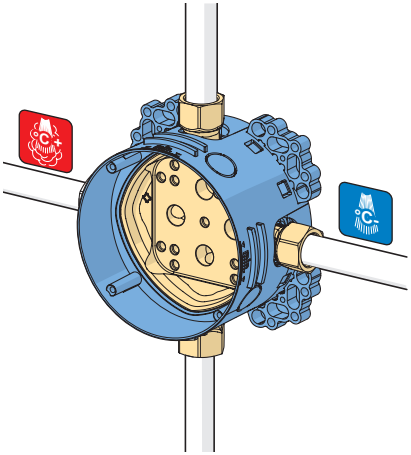

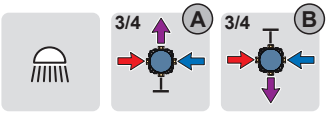
3/4
A
3/4
B

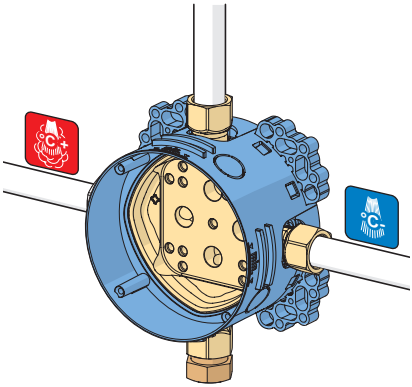

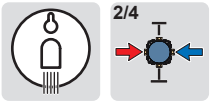
2/4

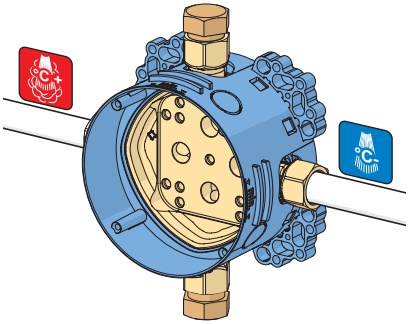

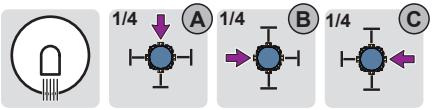
1/4
A
1/4
B
1/4
C

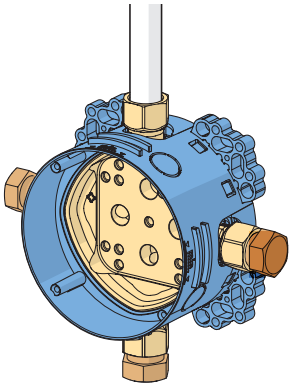

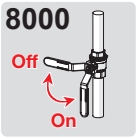

EN 1717
EN 806

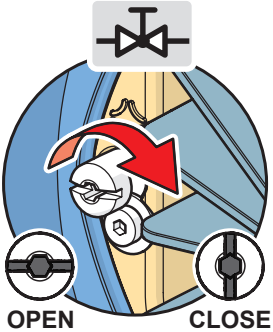

8001

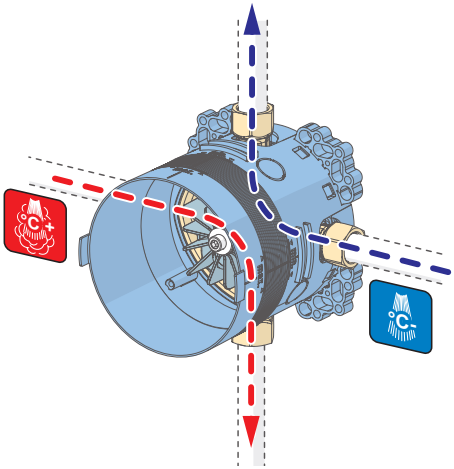

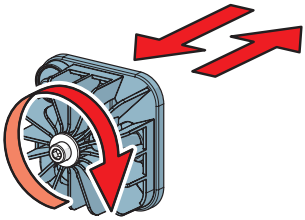

90°

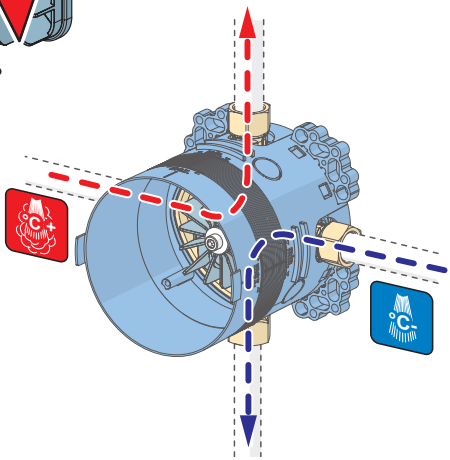

59 914 185

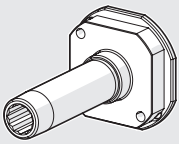

Rinsing tube

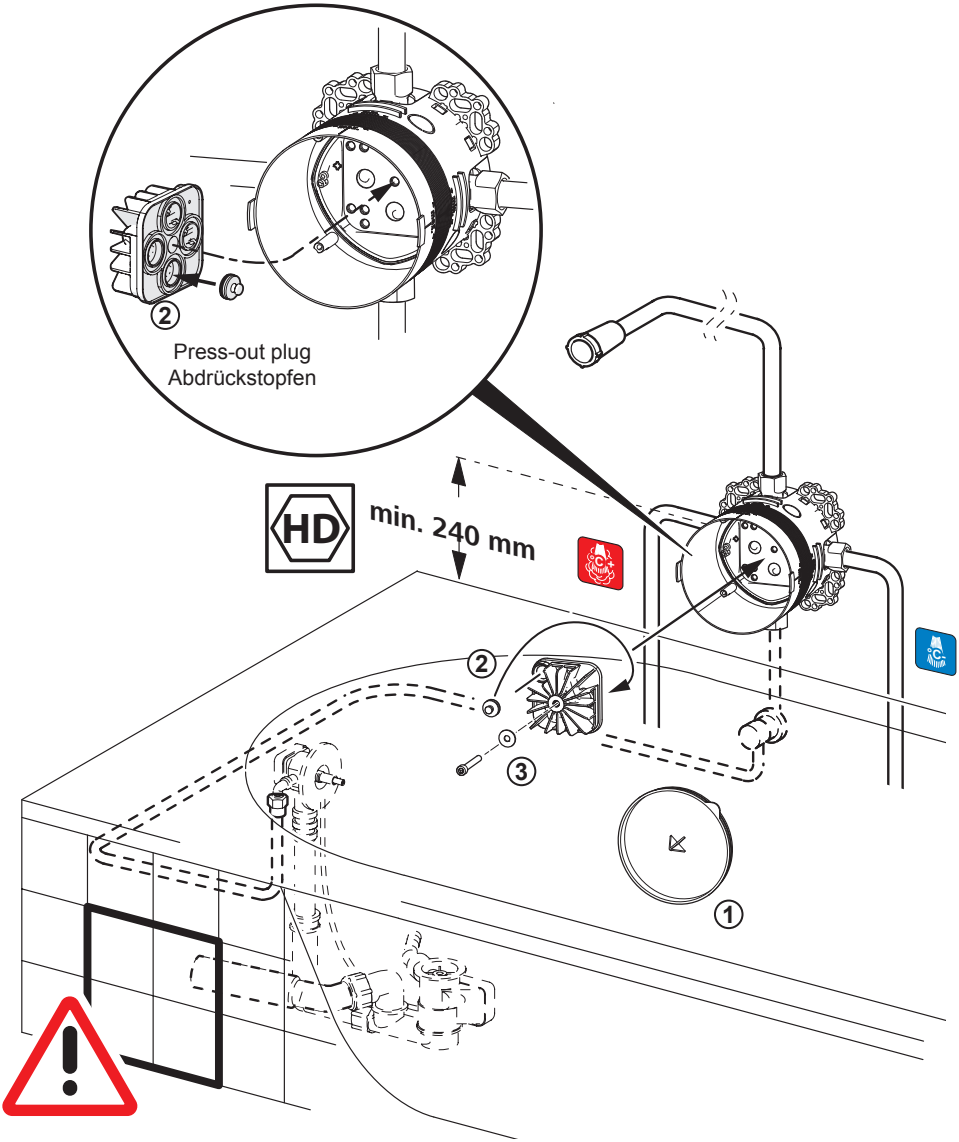
2
Press-out plug
Abdrückstopfen
HD
min. 240 mm
2
3
1

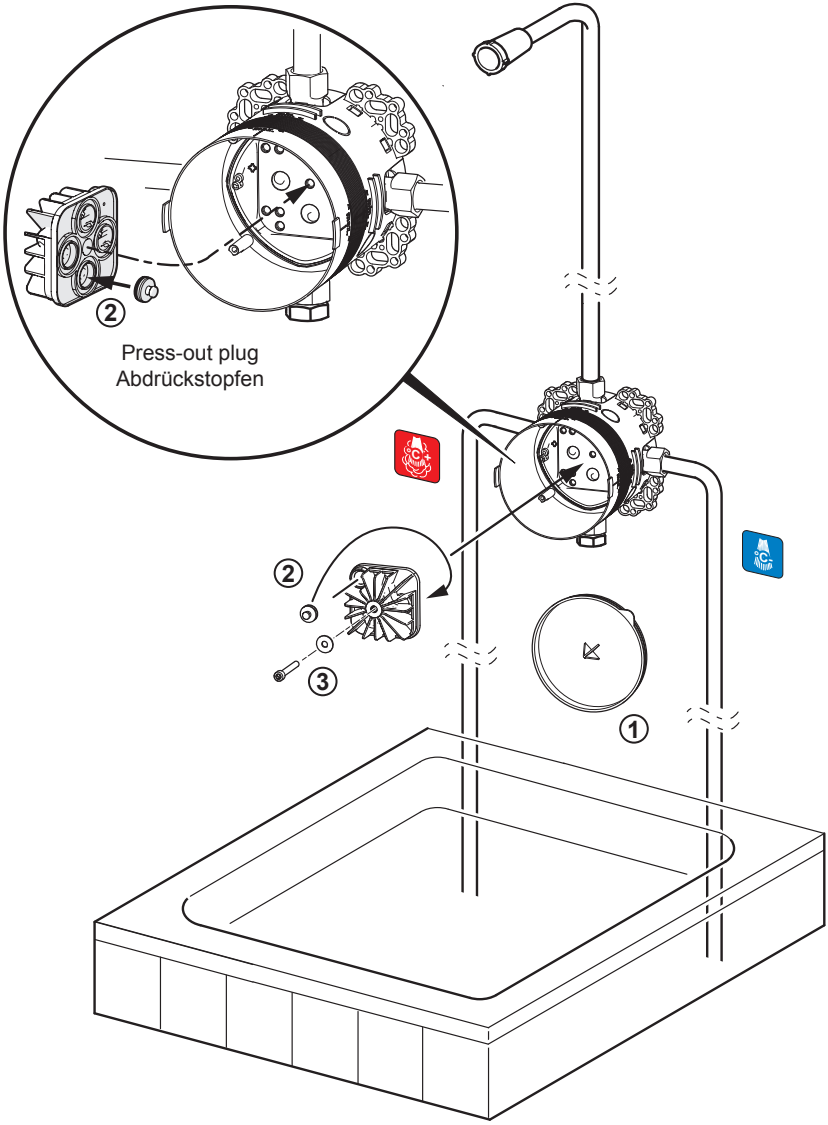
2
Press-out plug
Abdrückstopfen
2
3
1

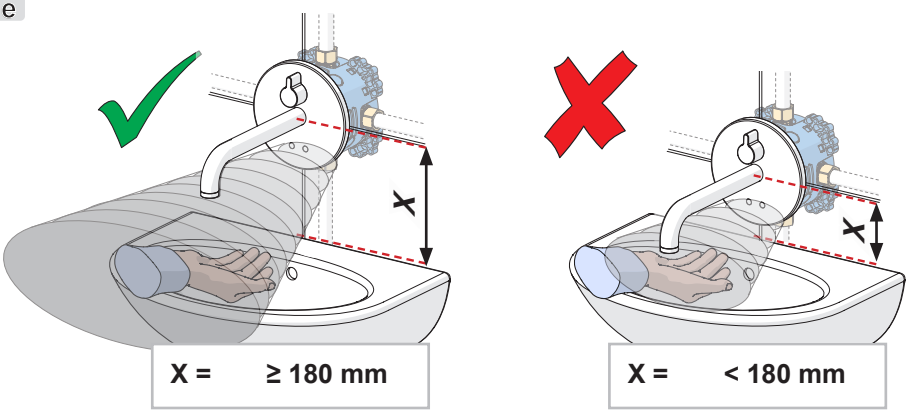
X
X
X = ≥ 180 mm
X = < 180 mm

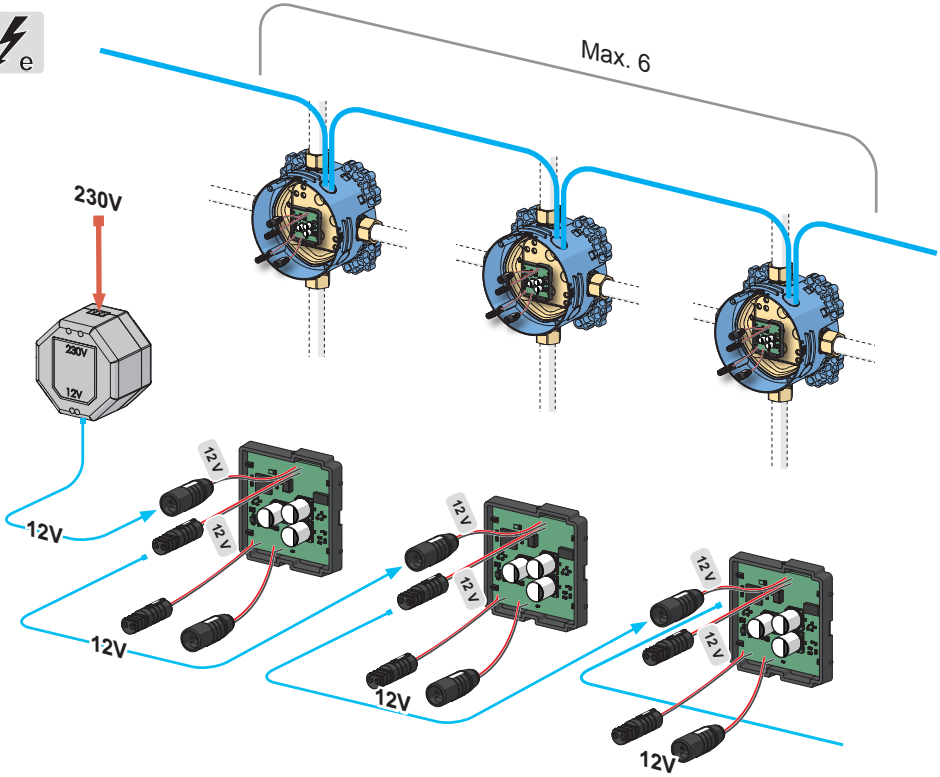
Max. 6
230V
230V
12V
12V
12V
12V
12V
12V
12V
12V
12V
12V

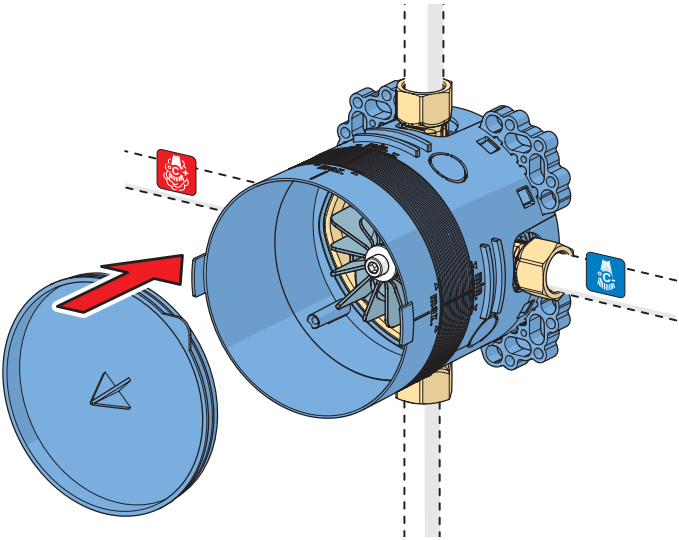

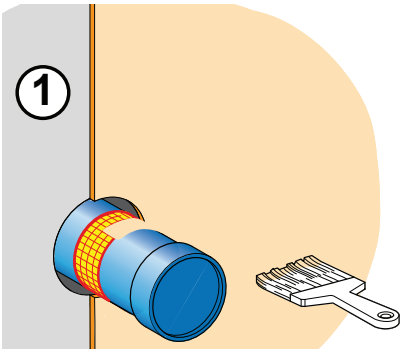
1

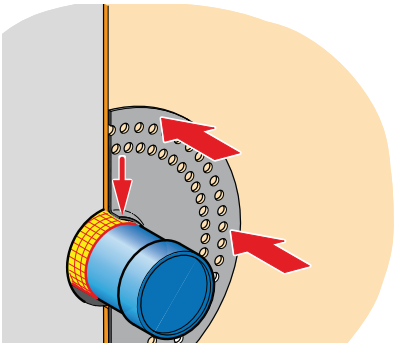
2

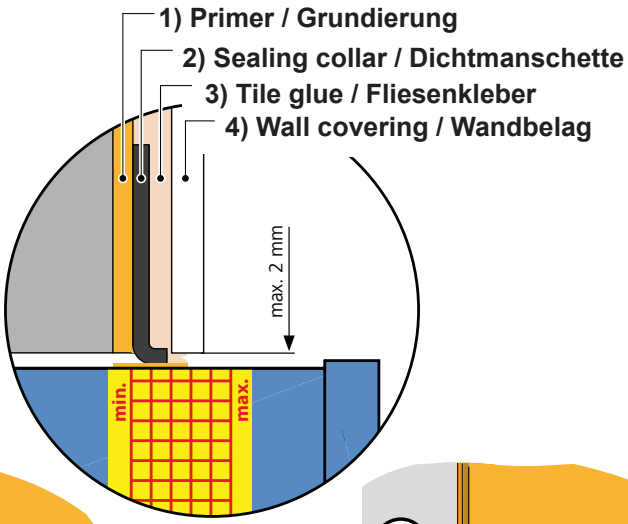
1) Primer / Grundierung
2) Sealing collar / Dichtmanschette
3) Tile glue / Fliesenkleber
4) Wall covering / Wandbelag
max. 2 mm
min.
max.

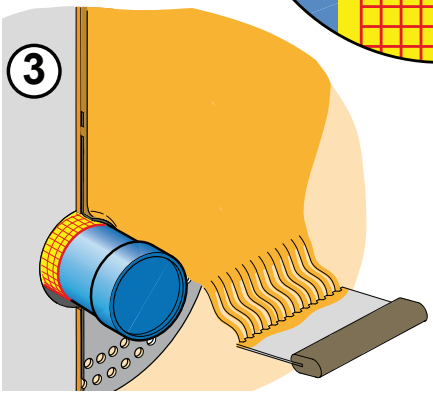
3

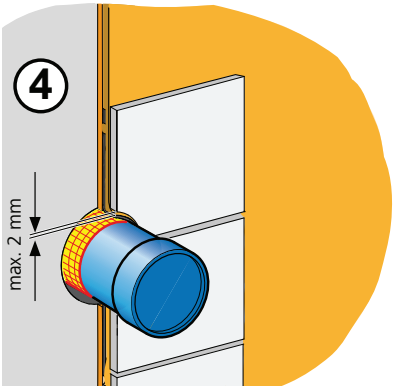
4
max. 2 mm

Oras Group is a powerful European provider of sanitary fittings: the market leader in the Nordics and a leading company in Continental Europe. The company's mission is to make the use of water easy and sustainable and its vision is to become the European leader of advanced sanitary fittings. Oras Group has two strong brands: Oras and Hansa.

The Group's head office is located in Rauma, Finland, and the Group has three manufacturing sites: Kralovice (Czech Republic), Olesno (Poland) and Rauma (Finland). Oras Group employs approximately 1,200 people in twenty countries. Oras Group is owned by Oras Invest, a family company and an industrial owner.

943243D-11-20

HANSA Armaturen GmbH
P. O. BOX 81 02 40
D-70519 Stuttgart
Sigmaringer Strasse 107
D-70567 Stuttgart
Tel.: +49 711 16 14 0
Fax: +49 711 16 14 368
info@hansa.de
www.hansa.com

HANSA